NOTE:

1. DIMENSIONS ARE NOMINAL AND ARE IN INCHES.
2. DIMENSIONS ARE SUBJECT TO CHANGE WITHOUT NOTICE.
   USE ONLY CURRENT, APPROVED TEMPLATING.

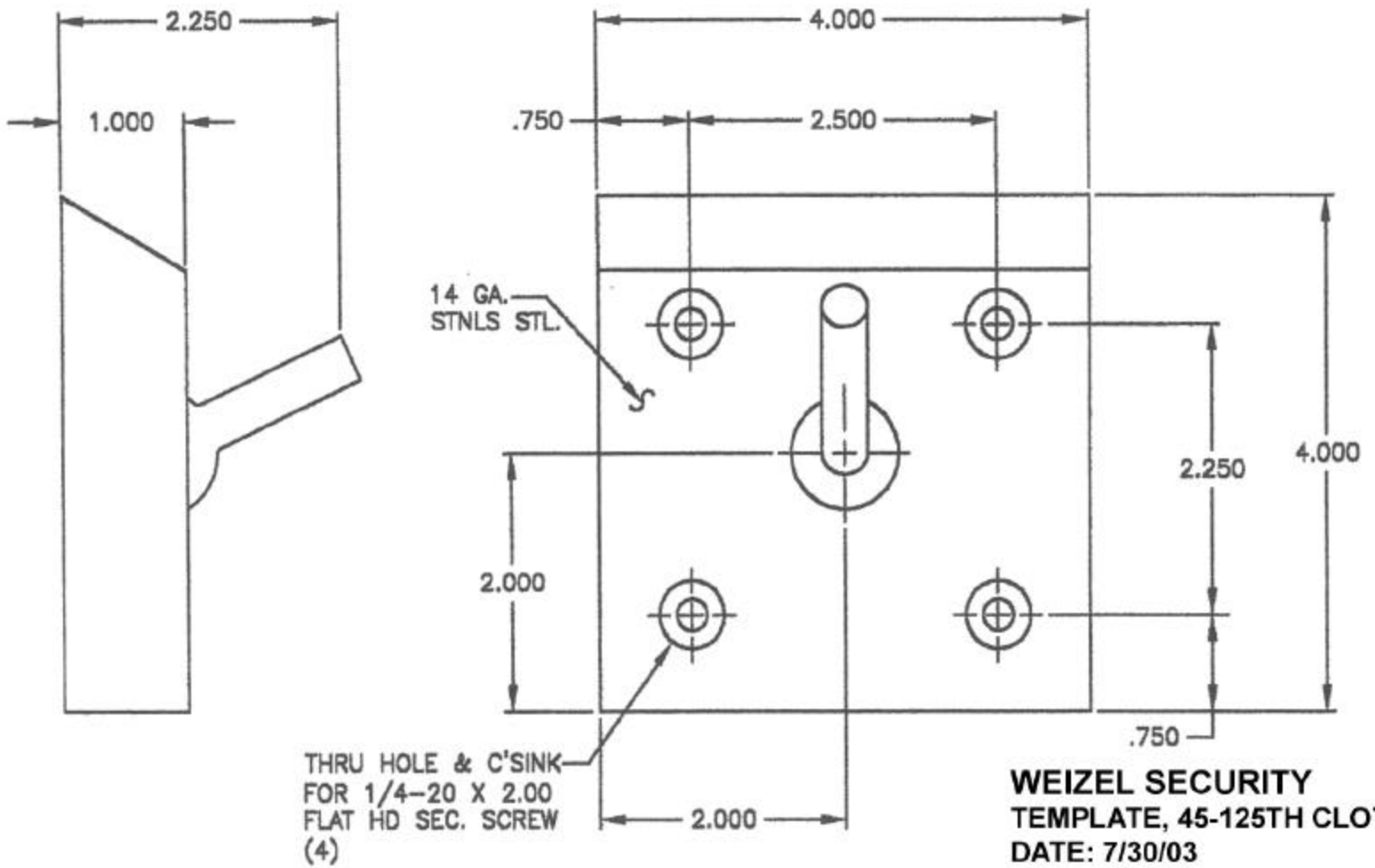

WEIZEL SECURITY

TEMPLATE, 45-125TH CLOTHES HOOK

DATE: 7/30/03